IAI
Quality and Innovation

ROBO Cylinder® High-speed Type RCS3-CT8C/CTZ5C

Achieving the Max. Speed of 2500 mm/s and Max. Acceleration of 3.2 G (Instantaneous Max. Acceleration of 4.8 G) Improved High-speed Performance Reduces the Cycle Time

ROBO Cylinder High-speed Type

RCS3-CT8C
(for horizontal axis)

RCS3-CTZ5C
(for vertical axis)

1. 1.4 Times the Max. Speed and 3.2 Times the Max. Acceleration/Deceleration (Compared to the Existing RCS3-SA8C)

The maximum speed of 2500 mm/s (1.4 times the level of an existing model) and maximum acceleration/deceleration of 3.2 G (3.2 times the level of an existing model) are realized by increasing the size and speed of the motor, revising the structural members, and adding other changes to the RCS3 series boasting the highest speed among the ROBO Cylinder family.
This cuts the travel time by 50% compared to an existing model (based on the conditions applicable to the graph on the right).

Comparison of travel time over a distance of 500 mm

RCS3-SA8C	
Acceleration	1G
Speed	1800mm/s
Load	2kg

RCS3-CT8C	
Acceleration	**3.2G**
Speed	**2500mm/s**
Load	**5kg**

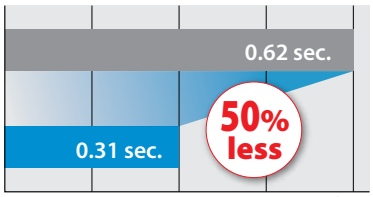

2. Supporting Single/Multi-axis Controllers

A single-axis controller offering excellent cost performance, and a multi-axis controller capable of operating up to three CT8C axes, are available.

Single-axis controller
< SCON-CA-CT4 >

Multi-axis controller
< XSEL-PCT/QCT>

3. Application

The CT8C and CTZ5C can be combined and used as a high-speed transfer system.
Such a system is ideal for transferring light objects at high speed, such as supplying parts of various types including electrical/electronic parts, PC/smart phone parts and the like.

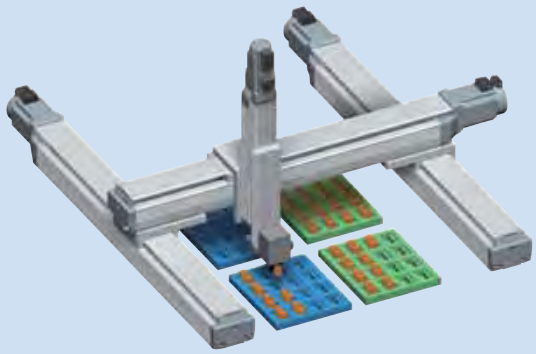

Inter-pallet work part placement system

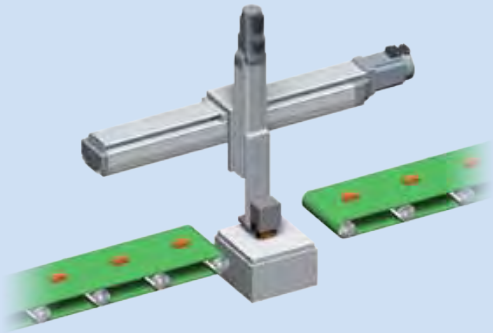

Transfer & placement system

Specification List

Series	Type	Actuator width (mm)	Ball screw lead (mm)	Max. speed (mm/s)	Max. acceleration (G)	Max. payload (kg)		Positioning repeatability (mm)	Dynamic allowable moment (N·m)			Stroke (mm)	See page
						Horizontal	Vertical		Ma	Mb	Mc		
RCS3	CT8C 	80	30	2500	3.2	5	—	±0.02	22.3	31.9	46.7	100 to 500 (every 50mm)	P.3
	CTZ5C 	55	10	883	3.2	1.5	1.0		6.4	9.2	14.2	25 to 100 (every 25mm)	P.5

System Configuration

■ When the XSEL controller is connected

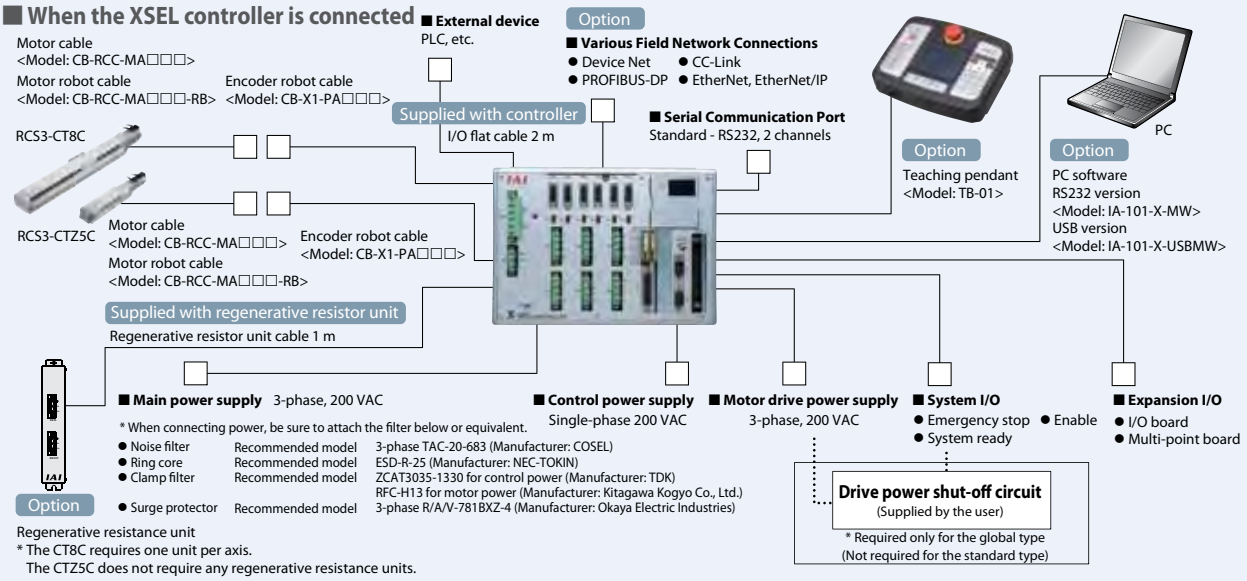

■ When the SCON controller is connected

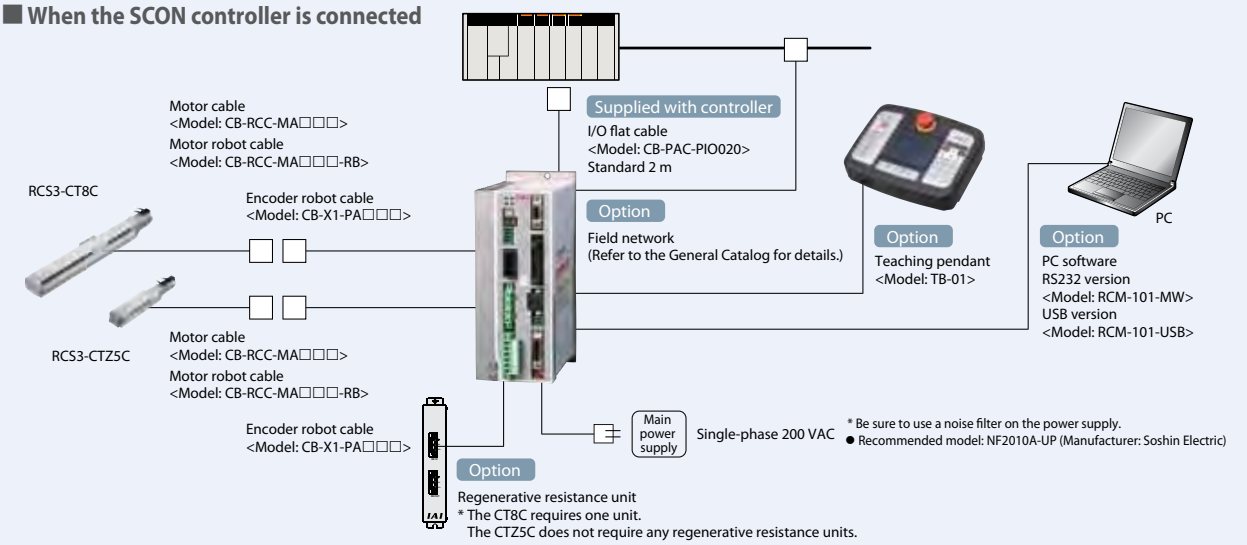

RCS3-CT8C

ROBO Cylinder High-Speed Slider Type Actuator Width 80 mm 200V Servo Motor

Model Specification Items

RCS3	CT8C	☐	400	30	☐	T2	☐	☐
Series	Type	Encoder type	Motor type	Lead	Stroke	Applicable controller	Cable length	Options
		I: Incremental specification A: Absolute specification	400: Servo motor, 400 W		100: 100 mm ~ 500: 500 mm (every 50 mm)	T2: SCON-CA-CT4 XSEL-PCT/QCT	N: None P: 1 m S: 3 m M: 5 m X☐☐: Specified length R☐☐: Robot cable	Refer to the option table below.

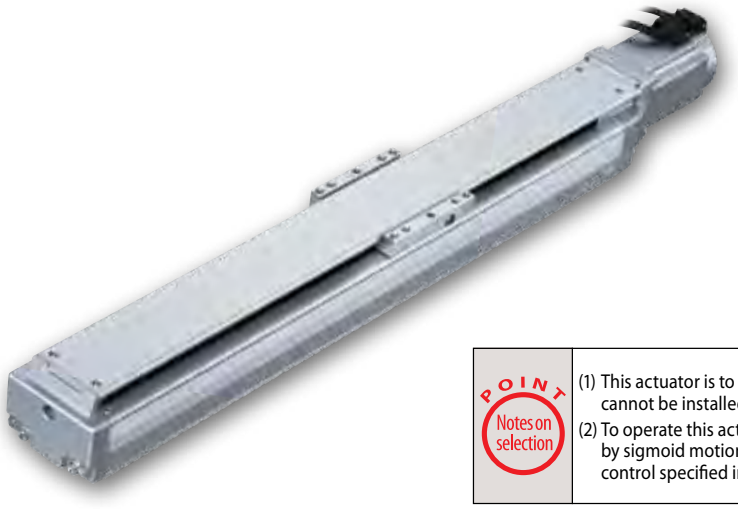

POINT Notes on selection

(1) This actuator is to be installed only horizontally. It cannot be installed horizontally on its side or vertically.

(2) To operate this actuator, an acceleration/deceleration by sigmoid motion must be set and vibration damping control specified in the program.

Actuator Specifications Table

■ Lead and Payload

Model	Motor output (W)	Lead (mm)	Maximum payload Horizontal (kg)	Maximum payload Vertical (kg)	Rated thrust (N)	Stroke (mm)
RCS3-CT8C-①-400-30-②-T2-③-④	400	30	5	—	226	100 to 500 (every 50 mm)

■ Stroke and Max. Speed

Lead \ Stroke	100 to 500 (every 50 mm)
30	2500

(Unit: mm/s)

Legend ① Encoder type ② Stroke ③ Cable length ④ Option

① Stroke List

Stroke (mm)	Standard price Absolute/Incremental
100	—
150	—
200	—
250	—
300	—
350	—
400	—
450	—
500	—

② Cable Length

Type	Cable symbol	Standard price
Standard type	**P** (1m)	—
	S (3m)	—
	M (5m)	—
Special length	**X06** (6m) ~ **X10** (10m)	—
	X11 (11m) ~ **X15** (15m)	—
	X16 (16m) ~ **X20** (20m)	—
Robot Cable	**R01** (1m) ~ **R03** (3m)	—
	R04 (4m) ~ **R05** (5m)	—
	R06 (6m) ~ **R10** (10m)	—
	R11 (11m) ~ **R15** (15m)	—
	R16 (16m) ~ **R20** (20m)	—

③ Option List

Name	Option code	Reference page	Standard price
Reversed-home specification	**NM**	—	—

Actuator Specifications

Item	Description
Drive sytem	Ball screw, Ø16mm, rolled
Positioning repeatability	±0.02mm
Lost motion	0.05mm or less
Base	Material: Aluminum with white alumite treatment
Static allowable load moment	Ma: 287.7 N•m Mb: 410.9 N•m Mc: 602.7 N•m
Dynamic allowable load moment (*)	Ma: 22.3 N•m Mb: 31.9 N•m, Mc: 46.7 N•m
Overhang load length	Ma direction: 445mm or less Mb•Mc directions: 445mm or less
Ambient operating temperature, humidity	0 to 40°C, 85% RH or less (Non-condensing)

(*) Based on 20,000 km of traveling life.

Allowable load moment directions

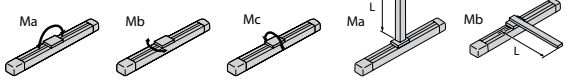

Overhang load length

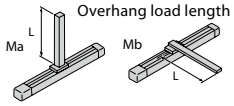

* If the non-motor side specification is selected, reverse the dimension on the motor side (distance to the home) and that on the front side.

*1 Connect the motor and encoder cables.
*2 During the home return, the slider moves to the ME, so pay attention not to let the slider hit surrounding parts.
*3 Reference position used when calculating the Ma moment.

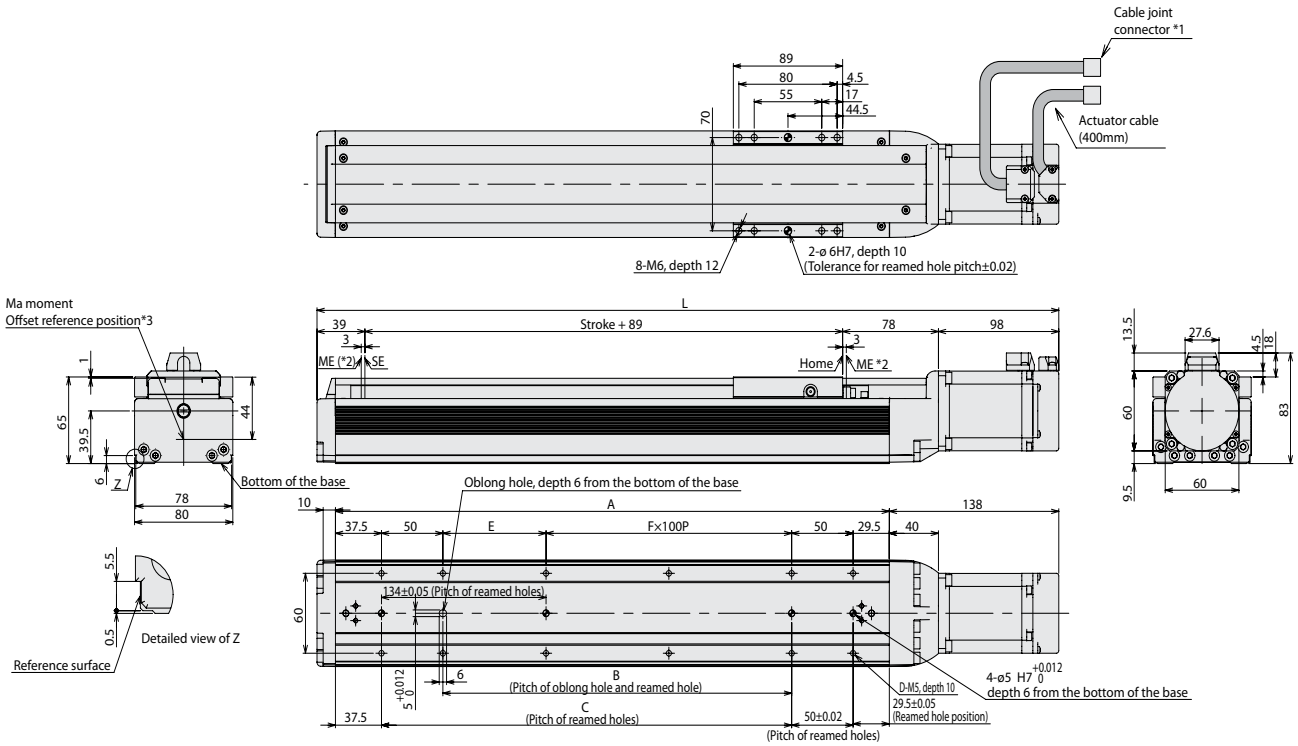

■ Dimensions and Mass by Stroke

Stroke	100	150	200	250	300	350	400	450	500
L	404	454	504	554	604	654	704	754	804
A	251	301	351	401	451	501	551	601	651
B	84	134	184	234	284	334	384	434	484
C	134	184	234	284	334	384	434	484	534
D	8	10	10	12	12	14	14	16	16
E	84	34	84	34	84	34	84	34	84
F	0	1	1	2	2	3	3	4	4
Mass (kg)	4.2	4.5	4.8	5.1	5.4	5.7	6	6.3	6.6

Compatible Controllers

RCS3-CT8C actuators can be operated with the following controllers. Select an appropriate controller type according to your application.

Name	External view	Model number (Note 1)	Max. # of controlled axes	Encoder type	Max. # of positioning points	Power-supply capacity	Description
Multi-axis controller (Standard type)		XSEL-PCT-1-400Ⓘ-N1-EEE-2-3	6 axes (Note 2)	Absolute Incremental	20,000 points	3-phase 200 VAC	Dedicated standard controller for CT4
Multi-axis controller (Global type)		XSEL-QCT-1-400Ⓘ-N1-EEE-2-3					CT4 global type controller (Safety category compliant specification)
Single axis controller		SCON-CA-400Ⓘ-NP-2-2-CT4	1 axis		512 points	Single-phase 200VAC	Position controller

(Note 1) The model numbers are based on a 1-axis specification without network support.
Ⓘ represents the encoder type (absolute/incremental). For details, refer to the CT4 Catalog or ROBO Cylinder General Catalog.
(Note 2) Up to 3 axes are supported if all of them are RCS3-CT8Cs.

RCS3-CTZ5C

ROBO Cylinder High-Speed Table Type Actuator Width 55 mm 200V Servo Motor

Model Specification Items

RCS3	CTZ5C	☐	60	10	☐	T2	☐	B	☐
Series	Type	Encoder type	Motor type	Lead	Stroke	Applicable controller	Cable length	Options	
		I: Incremental specification A: Absolute specification	60: Servo motor, 60 W		25: 25 mm ~ 100: 100 mm (every 25 mm)	T2: SCON-CA-CT4 XSEL-PCT/QCT	N: None P: 1 m S: 3 m M: 5 m X☐☐: Specified length R☐☐: Robot cable	Refer to the option table below.	

POINT Notes on selection

(1) Take note that this actuator cannot be operated when installed on its side or mounted on the ceiling.

(2) To operate this actuator, an acceleration/deceleration by sigmoid motion must be set and vibration damping control specified in the program.

Actuator Specifications Table

■ Lead and Payloads

Model	Motor output (W)	Lead (mm)	Maximum payload Horizontal (kg)	Maximum payload Vertical (kg)	Rated thrust (N)	Stroke (mm)
RCS3-CTZ5C-①-60-10-②-T2-③-B-④	60	10	1.5	1	85	25 to 100 (every 25 mm)

■ Stroke and Max. Speed

Lead \ Stroke	25 to 100 (every 25 mm)
10	833

(Unit: mm/s)

Legend ① Encoder type ② Stroke ③ Cable length ④ Option

① Stroke List

Stroke (mm)	Standard price Absolute/Incremental
25	—
50	—
75	—
100	—

② Cable Length

Type	Cable symbol	Standard price
Standard type	**P** (1m)	—
	S (3m)	—
	M (5m)	—
Special length	**X06** (6m) ~ **X10** (10m)	—
	X11 (11m) ~ **X15** (15m)	—
	X16 (16m) ~ **X20** (20m)	—
Robot Cable	**R01** (1m) ~ **R03** (3m)	—
	R04 (4m) ~ **R05** (5m)	—
	R06 (6m) ~ **R10** (10m)	—
	R11 (11m) ~ **R15** (15m)	—
	R16 (16m) ~ **R20** (20m)	—

Actuator Specifications

Item	Description
Drive sytem	Ball screw, Ø8mm, rolled
Positioning repeatability	±0.02mm
Lost motion	0.05mm or less
Base	Material: Aluminum with white alumite treatment
Static allowable load moment	Ma: 51.1 N•m Mb: 73.0 N•m Mc: 112.4 N•m
Dynamic allowable load moment (*)	Ma: 6.4 N•m Mb: 9.2 N•m, Mc: 14.2 N•m
Overhang load length	Ma direction: 50mm or less Mb•Mc directions: 50mm or less
Ambient operating temperature, humidity	0 to 40°C, 85% RH or less (Non-condensing)

(*) Based on 5,000 km of traveling life.

Allowable load moment directions

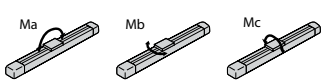

Overhang load length

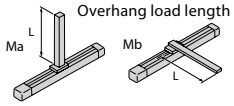

③ Option List

Name	Option code	Reference page	Standard price
Reversed-home specification	**NM**	—	—
Brake	**B**	—	—

* The brake is provided as a standard equipment.

Dimensional Drawings

* If the non-motor side specification is selected, reverse the dimension on the motor side (distance to the home) and that on the front side.

*1 Connect the motor and encoder cables.
*2 During the home return, the slider moves to the ME, so pay attention not to let the slider hit surrounding parts.
*3 Reference position used when calculating the Ma moment.

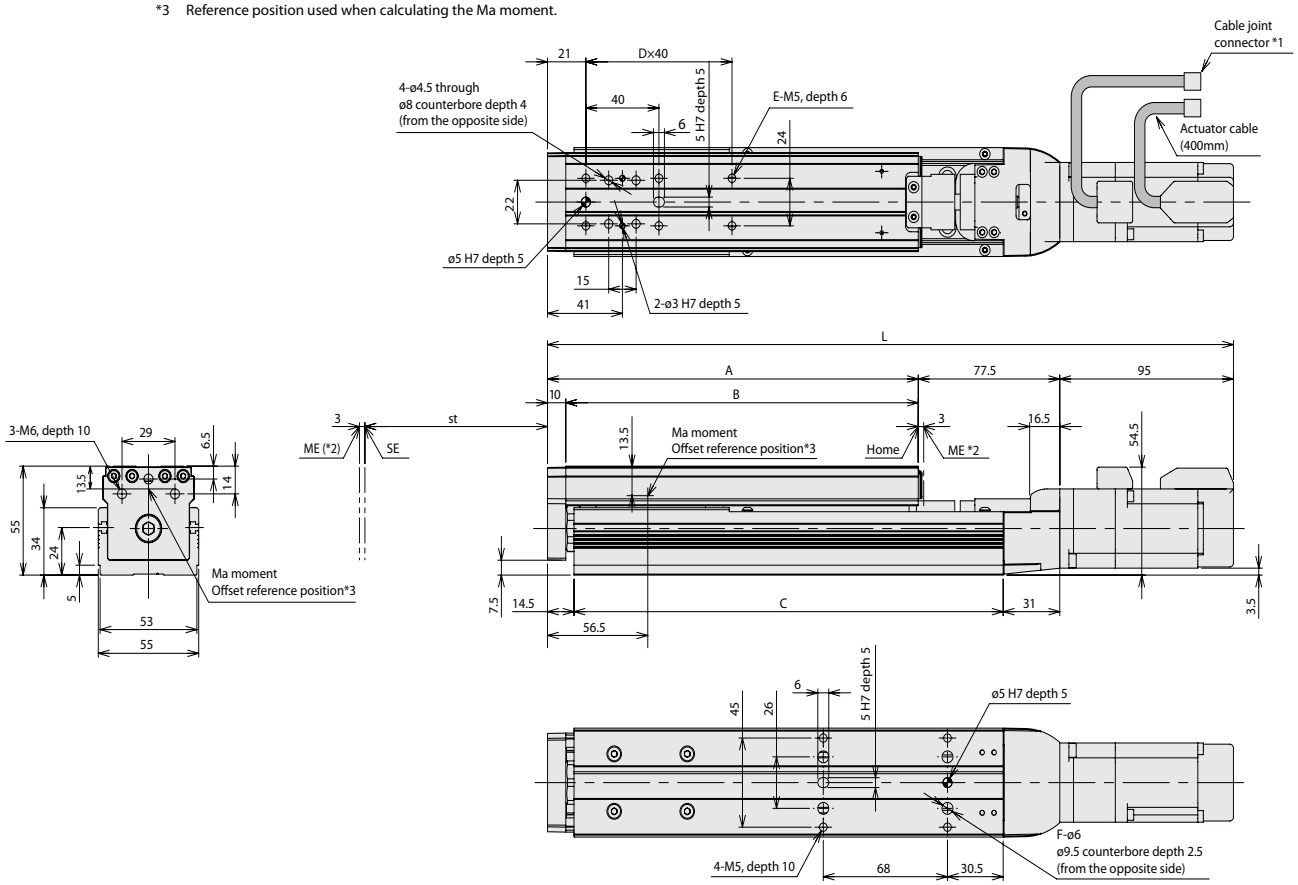

■ Dimensions and Mass by Stroke

Stroke	25	50	75	100
L	300.5	325.5	350.5	375.5
A	128	153	178	203
B	118	143	168	193
C	160	185	210	235
D	1	1	2	2
E	4	4	6	6
F	0	0	4	4
Mass (kg)	1.6	1.8	1.9	2

Compatible Controllers

RCS3-CTZ5C actuators can be operated with the following controllers. Select an appropriate controller type according to your application.

Name	External view	Model number (Note 1)	Max. # of controlled axes	Encoder type	Max. # of positioning points	Power-supply capacity	Description
Multi-axis controller (Standard type)		XSEL-PCT-1-60Ⓘ-N1-EEE-2-3	6 axes	Absolute Incremental	20,000 points	3-phase 200 VAC	Dedicated standard controller for CT4
Multi-axis controller (Global type)		XSEL-QCT-1-60Ⓘ-N1-EEE-2-3					CT4 global type controller (Safety category compliant specification)
Single axis controller		SCON-CA-60Ⓘ-NP-2-2-CT4	1 axis		512 points	Single-phase 200VAC	Position Controller

(Note 1) The model numbers are based on a 1-axis specification without network support.
Ⓘ represents the encoder type (absolute/incremental). For details, refer to the CT4 Catalog or ROBO Cylinder General Catalog.

Supported Controllers

The RCS3-CT8C/RCS3-CTZ5C can be operated with the controllers listed below.
Select a controller that matches the specifications of your system.

Controller series/type	SCON-CA-CT4	XSEL-PCT (standard) type	XSEL-QCT (global) type
Exterior view			
Total wattage of connectable axes	400W	2400W (*1)	
Number of controlled axes	1 axis	6 axes	6 axes
Control power input	AC200/230 Single-phase ±10%	AC200/230 Single-phase -15%, +10%	
Motor power input	AC200/230 Single-phase ±10%	AC200/230 3-phase ±10%	
Power frequency	50/60 Hz		
Insulation resistance	500 VDC, 10 MΩ or more	10 MΩ or more (between the power terminal and I/O terminal, and between all external terminals and the case, at 500 VDC)	
Withstand voltage	1500 VAC (1 minute)		
Control power capacity	48 VA	94VA (*2)	
Motor power capacity	RCS3-CT8C is operated: 1230 VA RCS3-CTZ5C is operated: 197 VA	RCS3-CT8C is operated: 1230 VA per axis RCS3-CTZ5C is operated: 197 VA per axis	
Position detection method	Incremental encoder/ Absolute encoder	Incremental encoder/ Absolute encoder	
Safety circuit configuration	Redundancy not supported	Redundancy not supported	Redundancy not supported
Drive-source cutoff method	Cut off by an internal relay	Cut off by an internal relay	External safety circuit
Enable input	—	Contact B input (internally powered)	Contact B input (externally powered, redundant)
Number of programs	—	128 programs	
Number of program steps	—	9,999 steps (total)	
Number of multi-tasking programs	—	16 programs	
Number of positioning points	512 points	20,000 points (total)	
Data storage device	Nonvolatile memory (FRAM)	Flash ROM + SRAM, backed up by a battery	
Data input method	Teaching pendant or PC software		
Standard I/Os	16 input points/16 output points (NPN/PNP selectable)	One PIO board with 48 I/O points (NPN/PNP) or PIO board with 96 I/O points (NPN/PNP) can be installed.	
Expansion I/Os	—	Up to three PIO boards with 48 I/O points (NPN/PNP) or PIO boards with 96 I/O points (NPN/PNP) can be installed.	
Operating ambient temperature/ humidity/ambience	0 to 40°C, 85% RH or less (Non-condensing); no corrosive gases	0 to 40°C, 10 to 95% RH (Non-condensing); no corrosive gases; no significant dust	
Controller mass (*3)	Approx. 1.2 kg	5.2 kg to 5.7 kg	4.5 kg to 5 kg

*1 Calculate the total wattage based on 800 W per axis for the RCS3-CT8C and 120 W per axis for the RCS3-CTZ5C.
*2 According to the basic specification. The capacity will vary if an expansion I/O box, field network, etc., are added.
*3 When the controller is equipped with an absolute battery, brake mechanism, expansion I/O box.

Notes on Installation

The platform on which to install the high-speed type ROBO Cylinder shall have enough rigidity and must be installed in such a way that the platform will not move as the ROBO Cylinder moves.

- The reactive force that generates when the ROBO Cylinder moves is determined by the mass of the moving part and the acceleration.

Reactive force: F = mA m: Mass of the moving part A: Acceleration

- The platform receives the above reactive force and the moment load due to the height H to the center-of-gravity position.

Moment load: M = FH = mAH H: Distance from the platform to the center of gravity of the moving part

Consider the rigidity to withstand this load moment.