Slider Type
Mini
Standard
Controllers Integrated
Rod Type
Mini
Standard
Controllers Integrated
Table/Arm /Flat Type
Mini
Standard
Gripper/ Rotary Type
Linear Servo Type
Cleanroom Type
Splash Proof
Controllers
PMEC /AMEC
PSEP /ASEP
ROBO NET
ERC2
PCON
ACON
SCON
PSEL
ASEL
SSEL
XSEL
Pulse Motor
Servo Motor (24V)
Servo Motor (200V)
Linear Servo Motor

RCA-A6R

ROBO Cylinder Arm Type Side-Mounted Motor 58mm Width 24V Servo Motor Ball Screw

■ Configuration: RCA — A6R — [ ] — 30 — [ ] — [ ] — [ ] — [ ] — [ ]

Series	Type	Encoder	Motor	Lead	Stroke	Compatible Controllers	Cable Length	Option
		I : Incremental A : Absolute	30 : 30W servo motor	12 : 12mm 6 : 6mm	50: 50mm ~ 200: 200mm (50mm pitch increments)	A1: ACON RACON ASEL A3: AMEC ASEP	N : None P : 1m S : 3m M : 5m X □□ : Custom R □□ : Robot cable	See Options below * Be sure to specify which side the motor is to be mounted (ML/MR).

* ASEL can only be used as the absolute encoder. Simple absolute encoders are considered incremental.

* See page Pre-35 for an explanation of the naming convention.

Power-saving

Technical References P. A-5

POINT Notes on Selection

(1) When the stroke increases, the maximum speed will drop to prevent the ball screw from reaching the critical rotational speed. Use the actuator specification table below to check the maximum speed at the stroke you desire.

(2) The load capacity is based on operation at an acceleration of 0.2G. This is the upper limit of the acceleration.

Actuator Specifications

■ Lead and Load Capacity

Model	Motor Output (W)	Lead (mm)	Max. Load Capacity Horizontal (kg)	Max. Load Capacity Vertical (kg)	Rated Thrust (N)	Stroke (mm)
RCA-A6R-①-30-12-②-③-④-B-⑤	30	12	–	3	48.4	50~200 (50mm increments)
RCA-A6R-①-30-6-②-③-④-B-⑤		6	–	6	96.8	

Legend: ① Encoder ② Stroke ③ Compatible controller ④ Cable length ⑤ Options

■ Stroke and Maximum Speed

Lead \ Stroke	50 ~ 200 (50mm increments)
12	400
6	200

(Unit: mm/s)

Encoder & Stroke List

② Stroke (mm)	Standard Price ① Encoder Incremental I	Standard Price ① Encoder Absolute A
50	–	–
100	–	–
150	–	–
200	–	–

④ Cable List

Type	Cable Symbol	Standard Price
Standard Type	P (1m)	–
	S (3m)	–
	M (5m)	–
Special Lengths	X06 (6m) ~ X10 (10m)	–
	X11 (11m) ~ X15 (15m)	–
	X16 (16m) ~ X20 (20m)	–
Robot Cable	R01 (1m) ~ R03 (3m)	–
	R04 (4m) ~ R05 (5m)	–
	R06 (6m) ~ R10 (10m)	–
	R11 (11m) ~ R15 (15m)	–
	R16 (16m) ~ R20 (20m)	–

* See page A-39 for cables for maintenance.

⑤ Option List

Name	Option Code	See Page	Standard Price
Brake (standard)	B	→ A-25	–
Power-saving	LA	→ A-32	
Bottom-mounted motor	MB	→ A-33	
Right-mounted motor	MR	→ A-33	
Left-mounted motor	ML	→ A-33	
Reversed-home	NM	→ A-33	

Actuator Specifications

Item	Description
Drive System	Ball screw ø10mm C10 grade (ball screw speed reduced by 1/2 by timing belt)
Positioning Repeatability	±0.02mm
Lost Motion	0.1mm or less
Base	Material: Aluminum (white alumite treated)
Allowable Load Moment	Ma: 8.1 N·m Mb: 10.0 N·m Mc: 6.5 N·m
Ambient Operating Temp./Humidity	0~40°C, 85% RH or less (non-condensing)

Directions of Allowable Load Moments

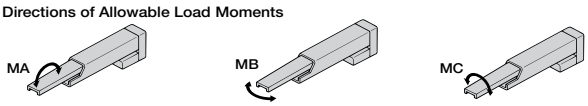

5,000 km service life

Sold & Serviced By:
ELECTROMATE
Toll Free Phone (877) SERVO98
Toll Free Fax (877) SERVO99
www.electromate.com
sales@electromate.com

Dimensions

For Special Orders P. A-9

*1 The motor-encoder cable is connected here. See page A-39 for details on cables.
*2 When homing, the rod moves to the ME; therefore, please watch for any interference with the surrounding objects.
ME: Mechanical end SE: Stroke end

Bottom-mounted motor (option code: MB)

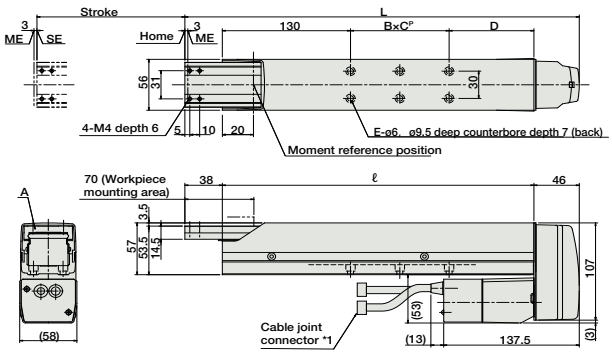

Right-mounted motor (option code: MR)

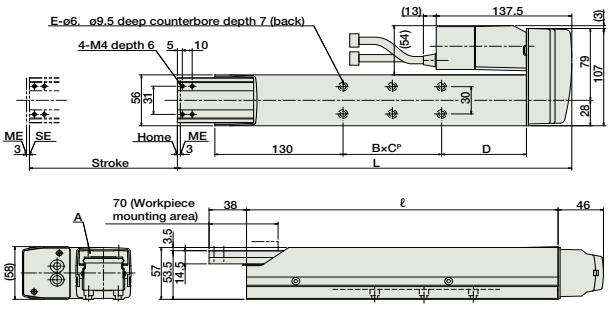

Left-mounted motor (option code: ML)

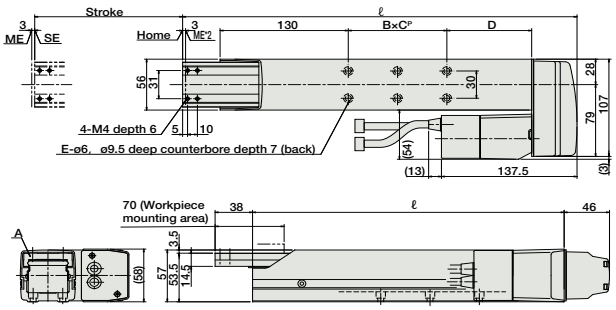

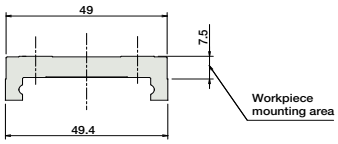

Details of section A

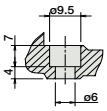

Cross section of base-mounting hole

Dimensions and Weight by Stroke

Stroke	50	100	150	200
L	300	350	400	450
ℓ	216	266	316	366
B×C^P	1×30	1×50	2×50	2×50
D	56	86	86	136
E	4	4	6	6
Weight (kg)	3.0	3.3	3.6	3.9

Note: The 50mm stroke model is only available with a right- or left-mounted motor. Please note that there is no 50mm stroke configuration for the standard model.

③ Compatible Controllers

The RCA series actuators can operate with the controllers below. Select the controller according to your usage.

Name	External View	Model	Description	Max. Positioning Points	Input Voltage	Power Supply Capacity	Standard Price	See Page
Solenoid Valve Type		AMEC-C-30I②-NP-2-1	Easy-to-use controller, even for beginners	3 points	AC100V	2.4A rated	–	→ P477
		ASEP-C-30I②-NP-2-0	Operable with same signal as solenoid valve. Supports both single and double solenoid types. No homing necessary with simple absolute type.		DC24V	1.3A rated 4.4A peak	–	→ P487
Splash-Proof Solenoid Valve Type		ASEP-CW-30I②-NP-2-0					–	
Positioner Type		ACON-C-30I②-NP-2-0	Positioning is possible for up to 512 points	512 points			–	→ P535
Safety-Compliant Positioner Type		ACON-CG-30I②-NP-2-0					–	
Pulse Train Input Type (Differential Line Driver)		ACON-PL-30I②-NP-2-0	Pulse train input type with differential line driver support	(-)			–	
Pulse Train Input Type (Open Collector)		ACON-PO-30I②-NP-2-0	Pulse train input type with open collector support				–	
Serial Communication Type		ACON-SE-30I②-N-0-0	Dedicated to serial communication	64 points			–	
Field Network Type		RACON-30②	Dedicated to field network	768 points			–	→ P503
Program Control Type		ASEL-C-1-30①②-NP-2-0	Programmed operation is possible Operation is possible on up to 2 axes	1500 points			–	→ P567

* This is for the single-axis ASEL.
* ① is a placeholder for the encoder type (I: incremental, A: absolute).
* ② is a placeholder for the code "LA", if the power-saving option is specified.

Sold & Serviced By:
ELECTROMATE
Toll Free Phone (877) SERVO98
Toll Free Fax (877) SERV099
www.electromate.com
sales@electromate.com