Nippon Pulse Stepper Motors

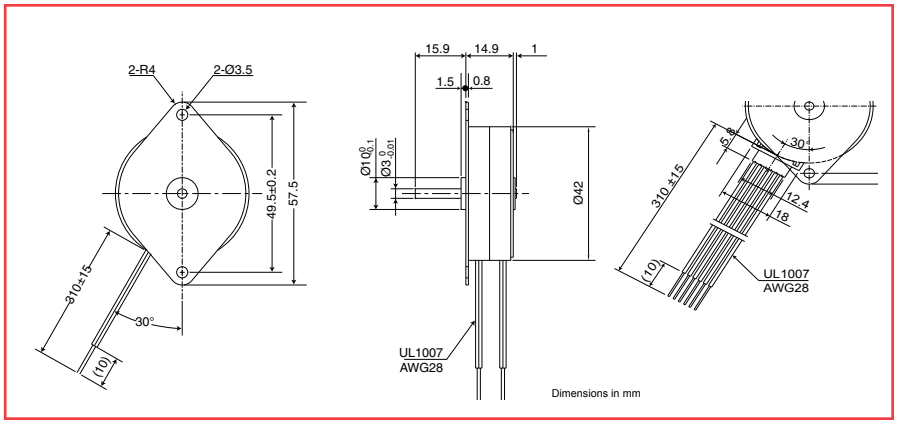

Specifications

Specification	Unit	PF(C)42T-48				PF(C)42T-96			
Type of Winding		Unipolar		Bipolar		Unipolar		Bipolar	
Excitation Mode*		Full step (2-2)				Full step (2-2)			
Step Angle	°	7.5 ±5%				3.75 ±5%			
Steps Per Revolution*		48				96			
Rated Voltage	V	12	5	12	5	12	5	12	5
Resistance	Ω	60	9.5	64	12	60	95	64	12
Inductance	mH	25	5.6	50	16	25	4	51	17
Holding Torque	mN·m	34	34	42	42	30	36	49	49
Rotor Inertia	kg·m²	14.3×10^{-7}				14.8×10^{-7}			
Starting Pulse Rate*	pps	345				450			
Slewing Pulse Rate*	pps	550				590			
Operating Temp. Range	˚C	-10 to +50				-10 to +50			
Temperature Rise*	˚C	70				70			
Weight	g	105				105			

Dimensions of Geared Model

PF(C)42T w/H Gear Head

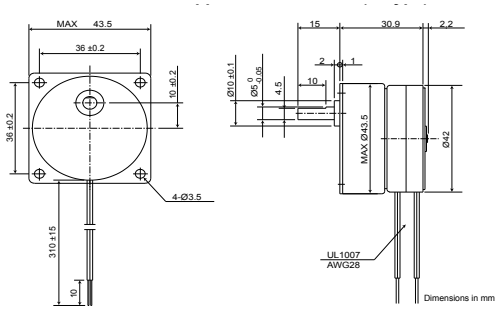

Gear Ratio	6/25	1/5	3/25	1/10	2/25	1/15	1/20	1/25
Maximum Torque	200mN·m				250mN·m			

Gear Ratio	1/30	1/50	1/60	2/125	1/75
Maximum Torque	300mN·m				

Gear Ratio	1/100	1/120	1/125	1/150	1/200	1/300
Maximum Torque	400mN·m					

* - All tin-can motor specifications are based on full-step constant voltage operation

Magnet type: Anisotropic

Note: Torque curves are for reference only and are not guaranteed.

Torque Curve (pull-out torque)*

Bipolar Constant Voltage (48P1)

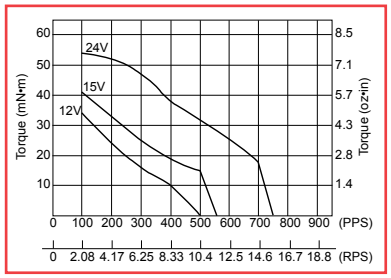

Coil Resistance: 64Ω

Unipolar Constant Current (48071)

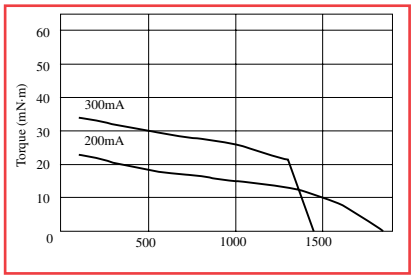

Coil Resistance: 19Ω Supply Voltage: 24V

Unipolar Constant Voltage (48C1)

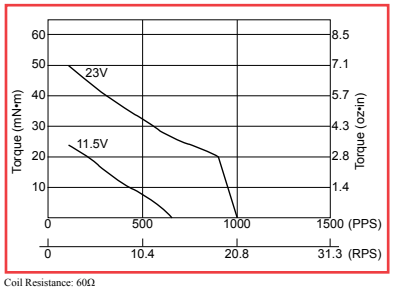

Coil Resistance: 60Ω

Bipolar Constant Current (48271)

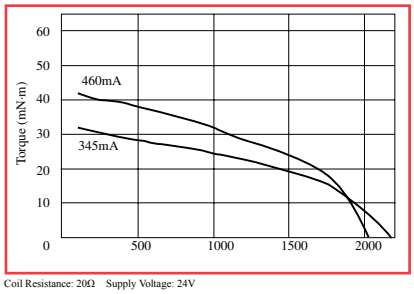

Coil Resistance: 20Ω Supply Voltage: 24V

Sold & Serviced By:
ELECTROMATE
Toll Free Phone (877) SERVO98
Toll Free Fax (877) SERVO99
www.electromate.com
sales@electromate.com