Slider Type
Mini
Standard
Controllers Integrated
Rod Type
Mini
Standard
Controllers Integrated
Table/Arm /Flat Type
Mini
Standard
Gripper/ Rotary Type
Linear Servo Type
Cleanroom Proof
Splash Proof
Controllers
PMEC /AMEC
PSEP /ASEP
ROBO NET
ERC2
PCON
ACON
SCON
PSEL
ASEL
SSEL
XSEL
Pulse Motor
Servo Motor (24V)
Servo Motor (200V)
Linear Servo Motor

RCL-SA5L ROBO Cylinder Slider Type Mini Long-Stroke Type 48mm Width Linear Servo Motor

■ Configuration:

RCL	SA5L	I	5	N	☐	☐	☐	☐
Series	Type	Encoder	Motor	Lead	Stroke	Compatible Controllers	Cable Length	Option
		I: Incremental	5 : 5W linear servo motor	N: No screw	36: 36mm ~ 216: 216mm (36mm pitch increments)	A1: ACON RACON ASEL A3: AMEC ASEP	N : None P : 1m S : 3m M : 5m X ☐☐ : Custom	NM: Reversed-home

* See page Pre-35 for an explanation of the naming convention.

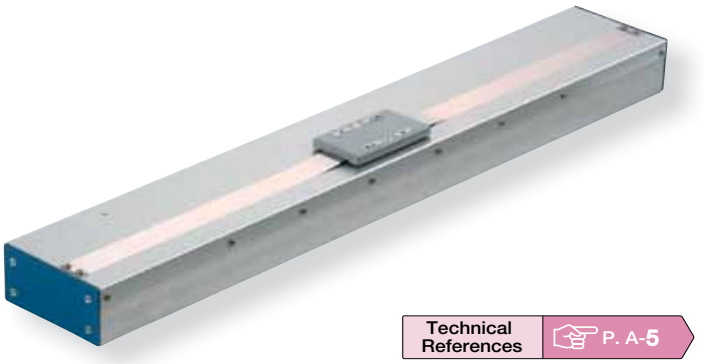

Technical References P. A-5

POINT Notes on Selection

(1) Please note that this type has magnetic flux leakage.
(If magnetism is a problem, please use SA1L, SA2L, or SA3L)

(2) The load capacity is determined by the acceleration and the duty.
Check the load capacity on the Load Capacity (Horizontal) vs. Acceleration graph on the right.

The duty is $\frac{\text{Operating time}}{\text{Operating time + stationary time}} \times 100$ per cycle.

(3) The mounting orientation is horizontal only. When operated vertically, please use caution, as the slider will fall when the power is turned OFF.

(4) Please note that an absolute unit cannot be used.

■ Load Capacity (Horizontal) vs. Acceleration

Max. Acceleration (G)	Load Capacity (kg) Continuous Operation (100% duty)
0.1	1.6
0.3	
0.5	1.0
1	0.5
1.5	0.35
2	0.25

Actuator Specifications

■ Lead and Load Capacity

Model	Motor Output (W)	Max. Load Capacity Horizontal (kg)	Max. Load Capacity Vertical (kg)	Rated Thrust (N)	Max. Momentary Thrust (N)	Max. Acceleration (G)	Positioning Repeatability (mm)	Stroke (mm)
RCL-SA5L-I-5-N-①-②-③-④	5	See table above	–	5	18	2	±0.1	36~216 (36mm increments)

Legend: ① Stroke ② Compatible controller ③ Cable length ④ Options

■ Stroke and Maximum Speed

Lead \ Stroke	36 ~ 216 (36mm increments)
(No lead screw)	1400

(Unit: mm/s)

① Stroke List

Stroke (mm)	Standard Price
36	–
72	–
108	–
144	–
180	–
216	–

③ Cable List

Type	Cable Symbol	Standard Price
Standard Type (Robot Cables)	P (1m)	–
	S (3m)	–
	M (5m)	–
Special Lengths	X06 (6m) ~ X10 (10m)	–
	X11 (11m) ~ X15 (15m)	–
	X16 (16m) ~ X20 (20m)	–

* The RCL comes standard with a robot cable.
* See page A-39 for cables for maintenance.

④ Options List

Name	Option Code	See Page	Standard Price
Reversed-home	NM	→ A-33	–

Actuator Specifications

Item	Description
Drive System	Linear servo motor
Encoder Resolution	0.042mm
Base	Material: Aluminum (white alumite treated)
Allowable Dynamic Moment (Note)	Ma: 0.49N·m Mb: 0.41N·m Mc: 0.72N·m
Overhang Load Length	Ma direction: 80mm or less Mb, Mc direction: 100mm or less
Ambient Operating Temp./Humidity	0~40°C, 85% RH or less (non-condensing)

(Note) Based on a 5,000km service life.

Sold & Serviced By:
ELECTROMATE
Toll Free Phone (877) SERVO98
Toll Free Fax (877) SERV099
www.electromate.com
sales@electromate.com

Dimensions

For Special Orders P. A-9

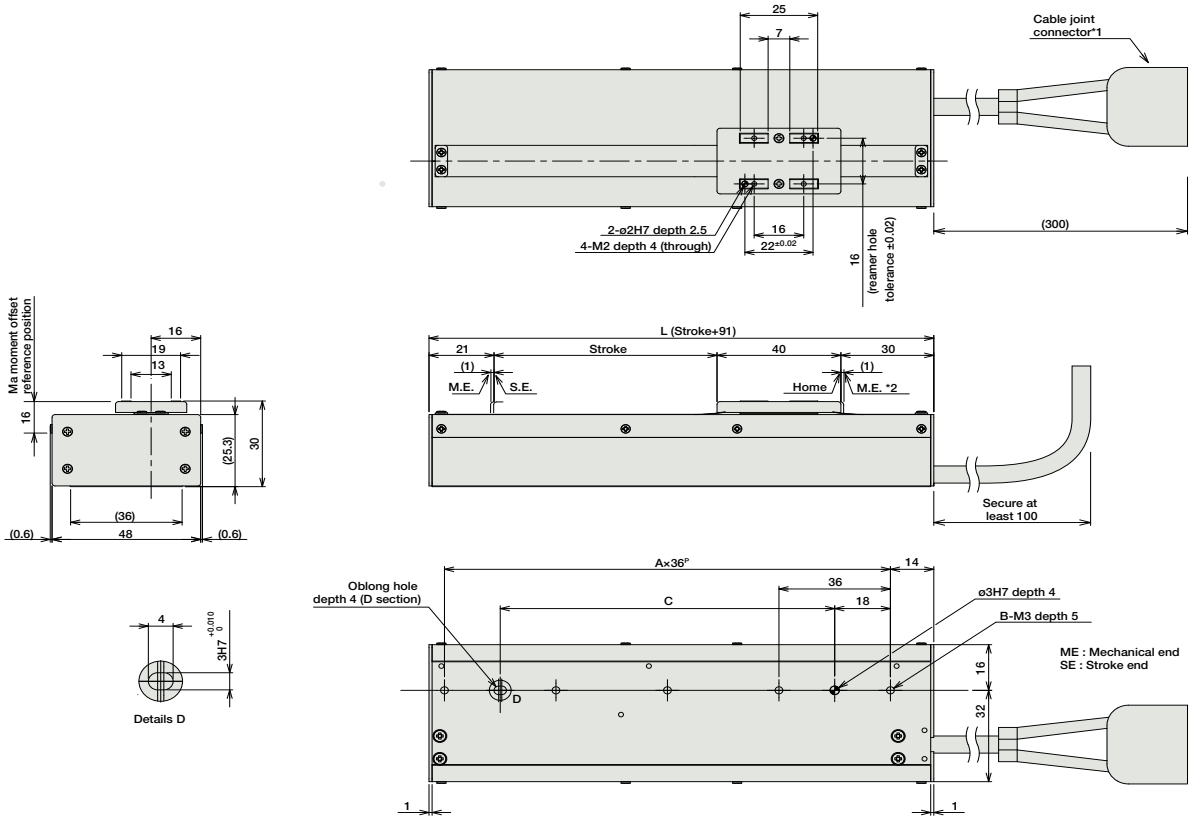

*1 The motor-encoder cable is connected here. See page A-39 for details on cables.

*2 When homing, the slider moves to the mechanical end; therefore, please watch for any interference with the surrounding objects.

■ Dimensions and Weight by Stroke

Stroke	36	72	108	144	180	216
L	127	163	199	235	271	307
A	3	4	5	6	7	8
B	4	5	6	7	8	9
C	72	108	144	180	216	252
Weight (kg)	0.35	0.42	0.48	0.55	0.62	0.68

② Compatible controller

The RCL series actuators can operate with the controllers below. Select the controller according to your usage.

Name	External View	Model	Description	Max. Positioning Points	Input Voltage	Power Supply Capacity	Standard Price	See Page
Solenoid Valve Type		AMEC-C-5I-NP-2-1	Easy-to-use controller, even for beginners	3 points	AC100V	2.4A rated	–	→ P477
		ASEP-C-5I-NP-2-0	Operable with same signal as solenoid valve. Supports both single and double solenoid types. No homing necessary with simple absolute type.		DC24V	6.4A max.	–	→ P487
Splash-Proof Solenoid Valve Type		ASEP-CW-5I-NP-2-0					–	
Positioner Type		ACON-C-5I-NP-2-0	Positioning is possible for up to 512 points	512 points			–	→ P535
Safety-Compliant Positioner Type		ACON-CG-5I-NP-2-0					–	
Pulse Train Input Type (Differential Line Driver)		ACON-PL-5I-NP-2-0	Pulse train input type with differential line driver support	(–)			–	
Pulse Train Input Type (Open Collector)		ACON-PO-5I-NP-2-0	Pulse train input type with open collector support				–	
Serial Communication Type		ACON-SE-5I-N-0-0	Dedicated to serial communication	64 points			–	
Field Network Type		RACON-5	Dedicated to field network	768 points			–	→ P503
Program Control Type		ASEL-C-1-5I-NP-2-0	Programmed operation is possible Operation is possible on up to 2 axes	1500 points			–	→ P567

* This is for the single-axis ASEL.

Sold & Serviced By:
ELECTROMATE
Toll Free Phone (877) SERVO98
Toll Free Fax (877) SERVO99
www.electromate.com
sales@electromate.com